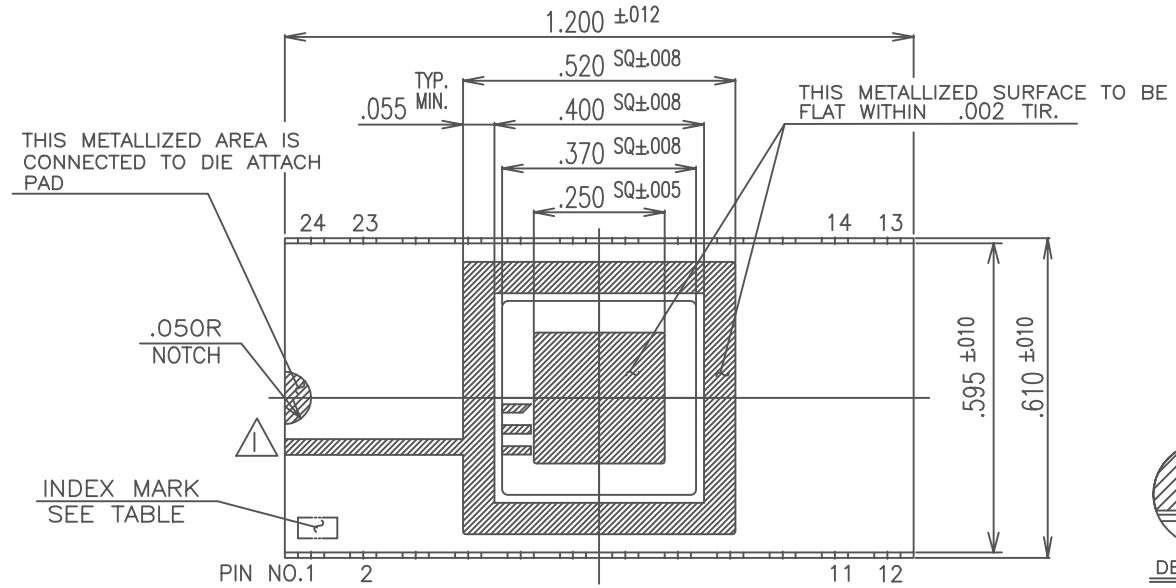

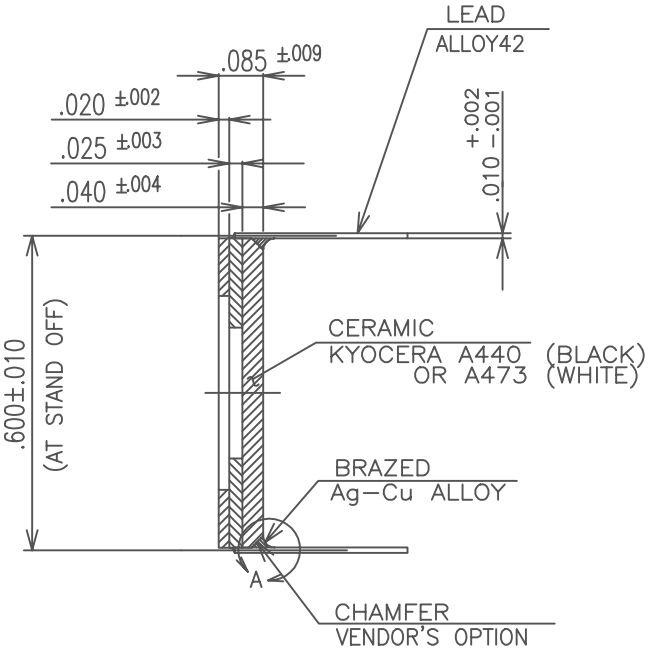

PART NO.	ID MARK	LEAD TIED DOWN
01		NIL
02	12	NO.12 ONLY
03	1	NO. 1 ONLY
04	21	NO.21 ONLY
05	24	NO.24 ONLY

VENDOR'S OPTION

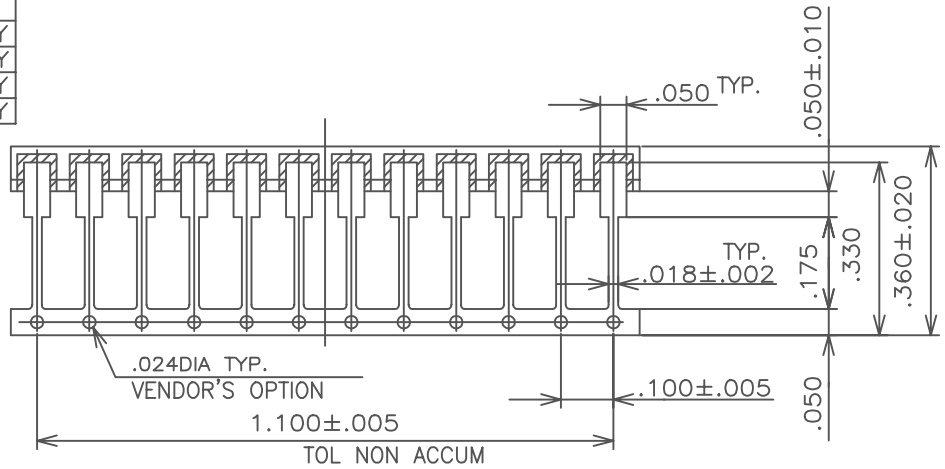

NOTES

1. PLATING THICKNESS TO BE PER CUSTOMER'S SPECIFICATION.
2. SEAL AREA TO BE METALLIZED.
3. DIE ATTACH AREA TO BE METALLIZED.
4. LEAD RESISTANCE : 0.30 OHM MAX

SW0241299-5 S=0 D=24	SB0241299-5 S=0 D=24
SW0241299-4 S=0 D=21	SB0241299-4 S=0 D=21
SW0241299-3 S=0 D=1	SB0241299-3 S=0 D=1
SW0241299-2 S=0 D=12	SB0241299-2 S=0 D=12
SW0241299-1 S=0 D=8	SB0241299-1 S=0 D=8

MODIFICATION					
	DELETED:GRINDING AFTER Au PLATING	SEP.16'93	Y.M	H.S / S.F	T.A
	REDRAWN (CAD DATA)	DEC.09.91	M.S	S.T / T.A	M.K
	CHANGED	DATE	DRAWN	CHECKED	APPROVED

NAME 24 LEAD SIDE BRAZED PACKAGE

SCALE 4/1

MATERIAL AS INDICATED

TOLERANCE UNLESS OTHERWISE SPECIFIED ±.005 THIRD ANGLE PROJECTION

DRAWN	CHECKED	APPROVED	DATE
S.F	S.T / T.A	M.K	DEC.09.91

KYOCERA

KYOCERA CORPORATION
KYOTO JAPAN

DRAWING NO. KD–78299–1

SHEET 1/2

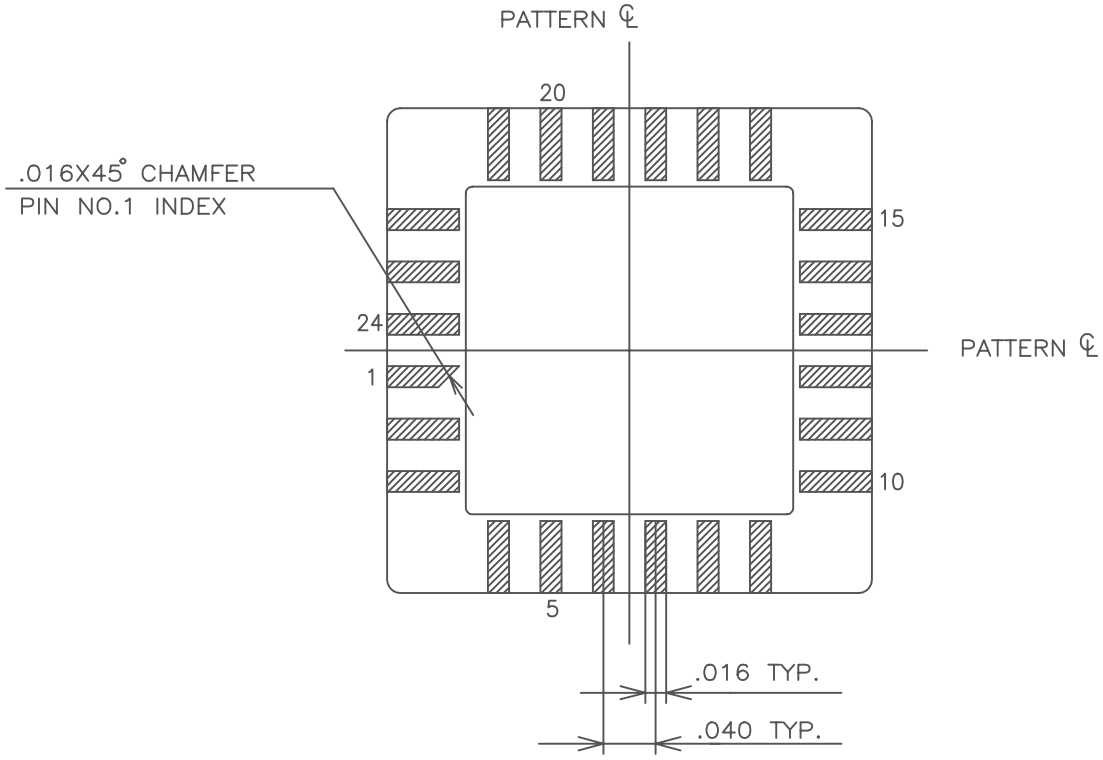

BONDING PATTERN

MODIFICATION					
	CHANGED	DATE	DRAWN	CHECKED	APPROVED

NAME	TOLERANCE	DRAWN	CHECKED	APPROVED	DATE
24 LEAD SIDE BRAZED PACKAGE	UNLESS OTHERWISE SPECIFIED	S.F	S.T / T.A	M.K	DEC.09.91
SCALE 10/1 — MATERIAL —	THIRD ANGLE PROJECTION				
KYOCERA	KYOCERA CORPORATION KYOTO JAPAN	DRAWING NO. KD-78299-1			SHEET 2/2